Safety and EMC	
EMC standard (EMC)	ETSI EN 301 489-1 V2.2.3 ETSI EN 301 489-17 V3.2.4
Safety standard	EN 61348-1:2015+A1:2021 EN 61348-2-13:2014+A1:2017
Radio Equipment(RED)	ETSI EN 300 328 V2.2.2
Certification	CE, EMC, RED

CCT Controller - 12-36V DC - 2 channels - 15A/channel - RF 2.4GHz - PUSH dimmer - S kydance

Ref. SK-V2-X

2-channel CCT controller for 12-36V LED luminaires.It offers smooth 0-100% flicker-free dimming and is compatible with CCT or single-color RF 2.4GHz Skydance remote controls.With auto-transmit and auto-sync functions that allow for efficient and synchronized control.It's dimmable via PUSH.

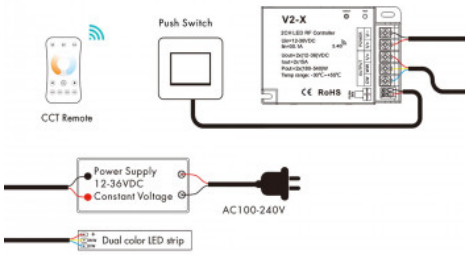

Product data
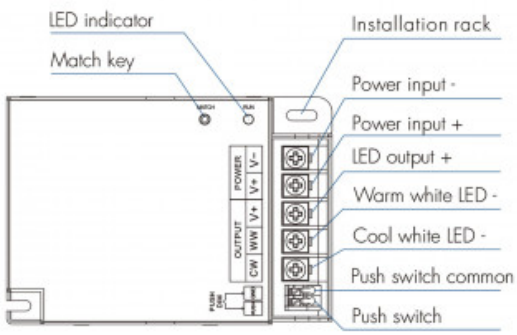
Power (W)	2x(180-540)W
Nominal Voltage (V)	12-36V DC
Use Outdoor	No
IP	IP20
Temperature range	-30°C ~ +55°C
Certificates	CE, ROHS
Warranty	5 years
Connectivity	RF
Number of channels	2
Maximum intensity (A)	15A/CH
Control Distance	15m
Length	107mm
Width	75mm
Height	24.5mm